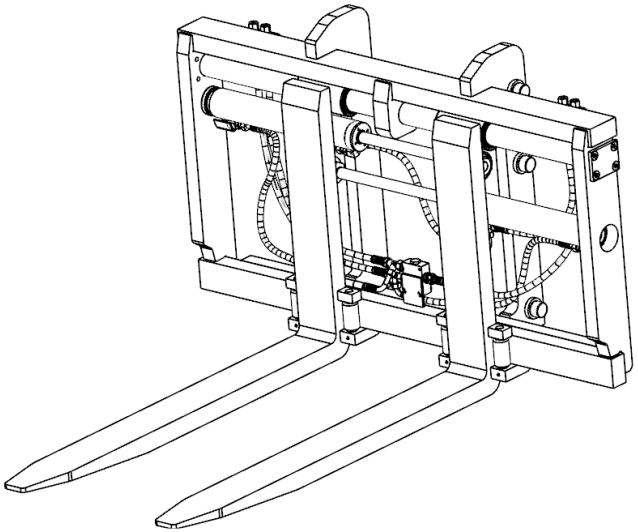

Fig.001

1 DESCRIPTION AND OPERATION

1.1 Positioner (FIG.001)

A device designed to position the loading forks connected to the chrome bars (hardened 42CrMo4) through a sleeve welded on the back of the fork and moved by hydraulic cylinders.
The forks slide on self-lubricating INA bushings and are equipped with scrapers and grease nipples to lubricate the chamber of the bushings when necessary. Translation at the bottom is performed by rollers fitted with grease nipples for lubrication
The screws and fittings are surface treated to prevent any attack by rust.
A safety grid can be fitted by means of bolts and washers (without any welding and/or drilling).
The hydraulic system is connected via inlets positioned based on the type of forklift mast. The connection fittings have 24°cone metric thread DIN 3861 (12L or 15L). The seal of fittings for the positioner's hydraulic system is made with O-rings and retaining washer. The forks positioning hydraulic system is equipped with a valve to ensure the perfect synchronism of the forks.

2 ASSEMBLY INSTRUCTIONS

2.1 Integral Positioner

Install the positioner on the plate of the forklift according to the instructions of the mast itself. Connect the system on the mast of the forklift to the fittings of the equipment, tightening according to the regulations of the fittings used.

2.2 Hydraulic system (Fig.002)

2.2.1 Connect, with flexible hoses complete with terminal fittings, the system on the mast of the forklift to fittings "Q1 (forks opening)" and "Q2 (forks closure), Q3 (left side-shift), Q4 (right side-shift) of the equipment, tightening according to the regulations of the fittings used.

2.2.2 Perform some test movements to check the perfect hydraulic seal of the fittings, the speed and the synchronism of the forks movement. In the event of an oil leak, remove the affected fittings and clean them thoroughly. The synchronism of the forks is guaranteed by the valve. See the table at the end of section 4.4 for the flow rates of the oil and recommended pressures.

2.2.3 At this point perform some unloaded side-shift manoeuvres, as far as the end of stroke in both directions and hold under pressure for a few seconds. Then carry out a leak-proof control of the hydraulic connections. Any oil leaks require the disassembly and cleaning of the fittings. Tighten them to the correct torque in accordance with the regulations.

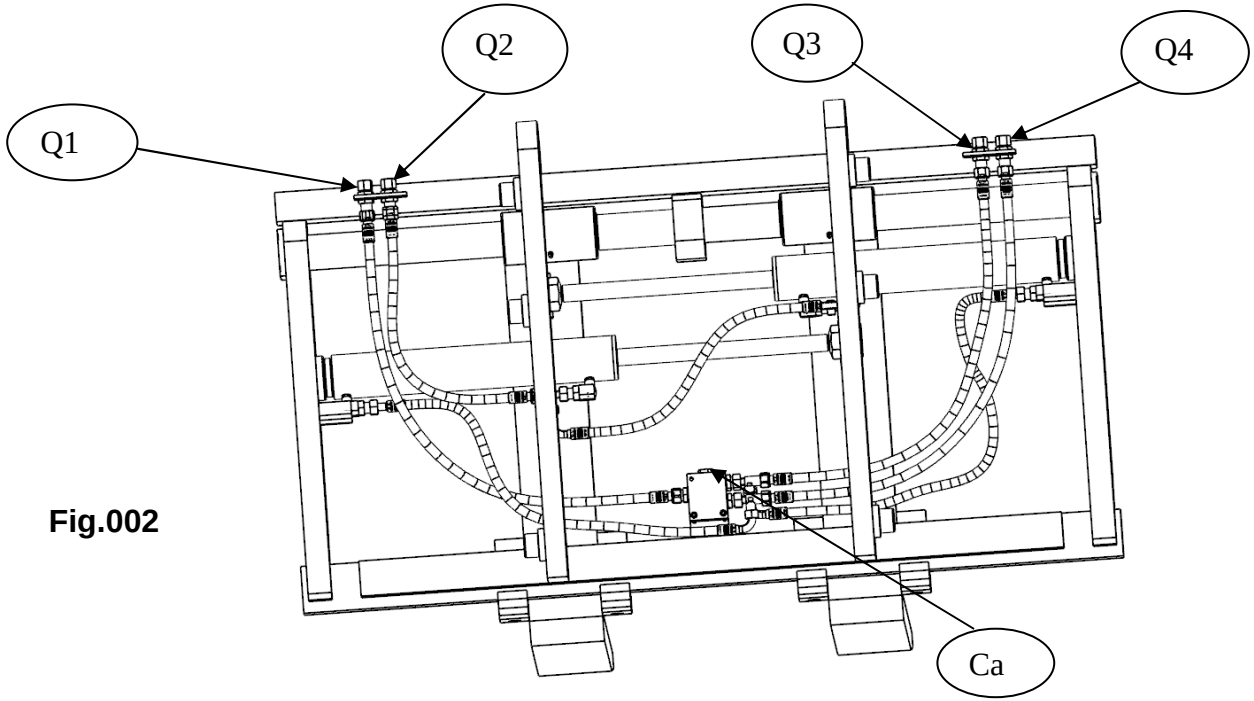

Fig.002

2.3 Forks disassembly and assembly

- Switch off the forklift, remove the pressure in the supply circuit, and make sure the pump is not engaged and lever of the distributor is not activated during the operation.

2.3.1 Tighten nut "c" on the pulling lug with hex wrench "a" and loosen the front nut "d" with the socket wrench "b". (Fig.004, Fig.005)
2.3.2 Remove the cover "X" loosening the 4 x M12 screws with an 8 mm Allen key. (Fig.006)
2.3.3 Attach the fork support with a cable.
2.3.4 Extract the bar “Y”. (Fig.006)
2.3.5 Extract the fork. (Fig.006)
2.3.6 For assembly, position the fork support and insert the bar "Y". (Fig.006)
2.3.7 Repeat in reverse order from point 2.3.3 to 2.3.1

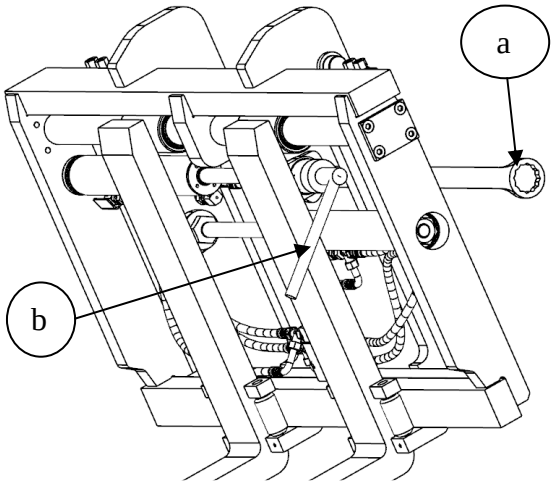

Fig.004

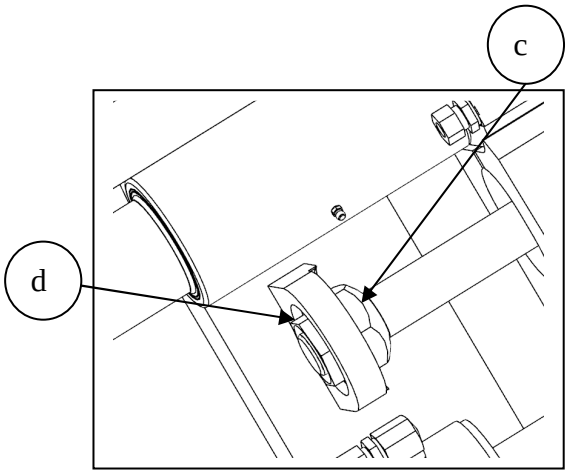

Fig.005

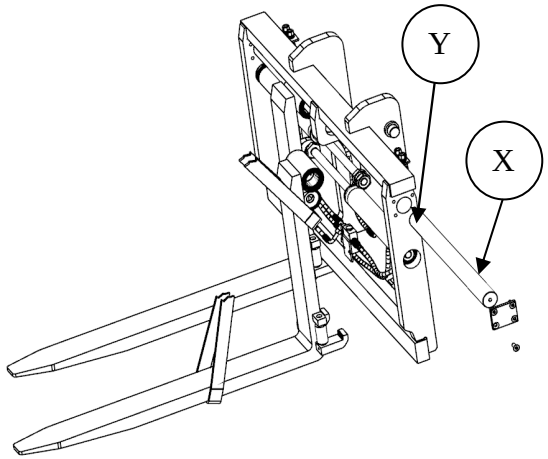

Fig.006

2.4 Safety grid assembly (Fig.007)

2.4.1 Position the grid by resting it on the plate welded to the frame.
Bolt the grid with TCEI M16x50 Cl. 10.9 bolts UNI 5931 (DIN 912) and serrated washers Ø17x24 as in the figure.
Tightening torque 190Nm (133 Ft/Lbs).

2.5 Final testing

Having performed the procedures referred to in points 2.1, 2.2,

2.3, and 2.4 if necessary, perform some side-shift movements (not fork positioning) as far as the stop and remain under pressure for a few seconds with the maximum nominal load on the forks.
Check the perfect seal of the hydraulic connections.
Any small oil leaks require the disassembly and cleaning of the fittings.
Tighten them to the correct torque in accordance with the regulations.

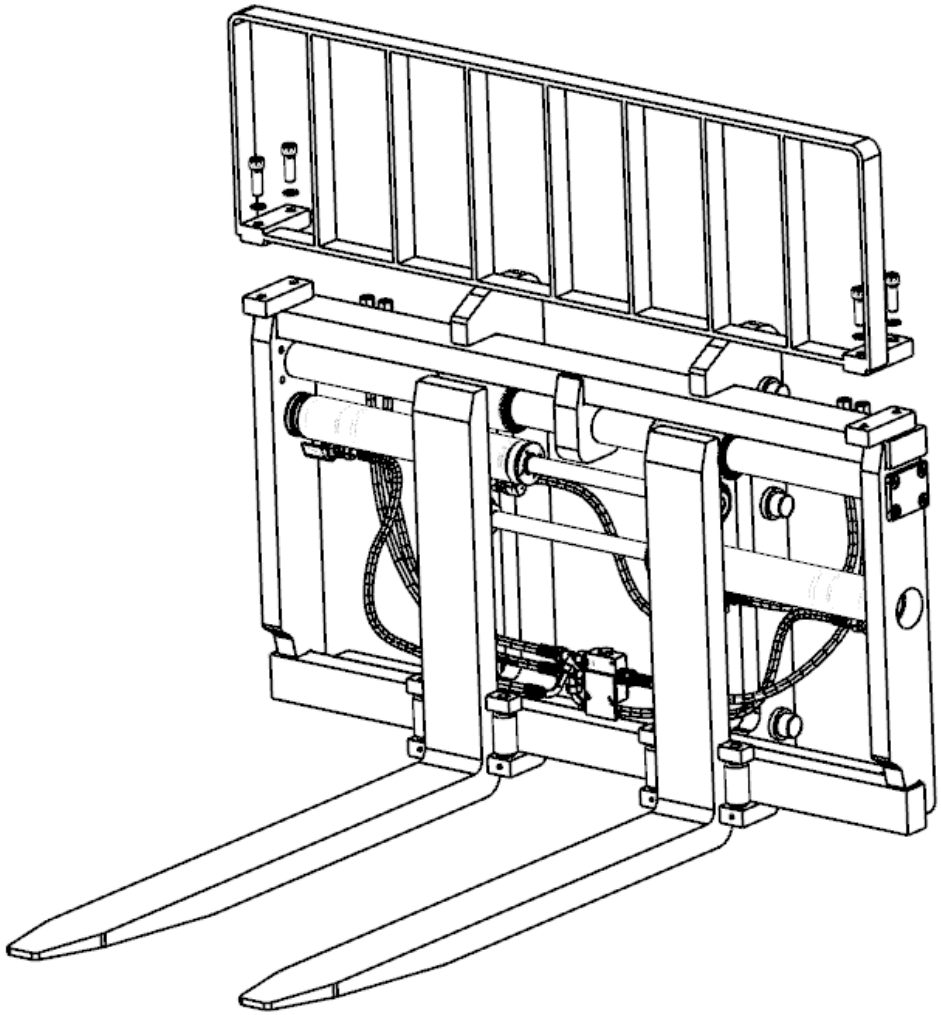

Fig.007

3 USER INSTRUCTIONS

3.1 Controls and recommendations

- Introduce the loaded fork as centrally as possible
- Keep the load close to the ground for greater stability of the forklift when manoeuvring
- Keep the load tilted (tips of the fork raised) during the movement of the forklift
- Act gently on the command levers to avoid a sudden burst of pressure in the hydraulic circuit compromising the stability of the load
- Adapt the speed of the forklift to the stability and nature of the load and the difficulties caused by spaces and dimensions
- Pay attention to inclined surfaces and the unevenness of the ground since these limit the stability of the load
- Before introducing the forks, adjust their position so that no force is exerted against the foot of the pallet

3.2 Manoeuvres to avoid

- Moving loads in excess of the nominal load
- Moving an unstable load
- Picking up a load with a single fork even if of a low weight
- Moving a flanked load using the load already on the forks
- Performing movements or manoeuvres fast with the load lifted high
- Performing side-shift or positioning travel of the forks with the load on the forks and forklift moving
- Follow al other instructions indicated in the forklift's user manual

3.3 Prohibited manoeuvres

- It is not a clamp (do not to use the forks to secure the load in opening or closing)
- Use the equipment for purposes other than those for which it was designed
- Operate the movements control lever when the equipment is under maintenance
- Use the forklift truck if visibility is poor due to the oversize of the load
- Tamper with the equipment
- Linger in the working area of the equipment or the forklift truck;
- Use the equipment if the structure is deformed, however slight, or there is a malfunction
- Follow al other instructions indicated in the forklift's user manual

4 MAINTENANCE

4.1 Introduction

The equipment is delivered with guides lubricated with high quality grease, so as to ensure the normal adjustment and polish of the sliding surfaces in the initial usage period. The user should grease the bushings sliding zone on the chromed bar.
The recommended lubricant is ISO X M2 grease (SHELL ALVANIA GREASE R2 or equivalent).
For the use of the equipment in excessively dusty environments ISO CB 32 oil is recommended (ESSO NUTO 32 or equivalent).

The maintenance indicated below relates to the correct use of equipment in a slightly dusty environment.

4.2 Scheduled maintenance (Fig.008)

4.2.1 Every 1000 hours.

- Check the hydraulic seal of the fittings.
- Grease points “g1”,”g2”.
- Check the general condition of the equipment.
- Specific control of the condition of the hoses.
  Check the integrity of the fork support rollers.
- Control the hydraulic connections (if necessary, tighten the fittings to the cylinders according to the regulations of the fittings used).
- Check for tightness of the cylinder seals (if necessary or if due to a leak dismantle the cylinders according to the instructions in sections 4.3.1, 4.3.5).

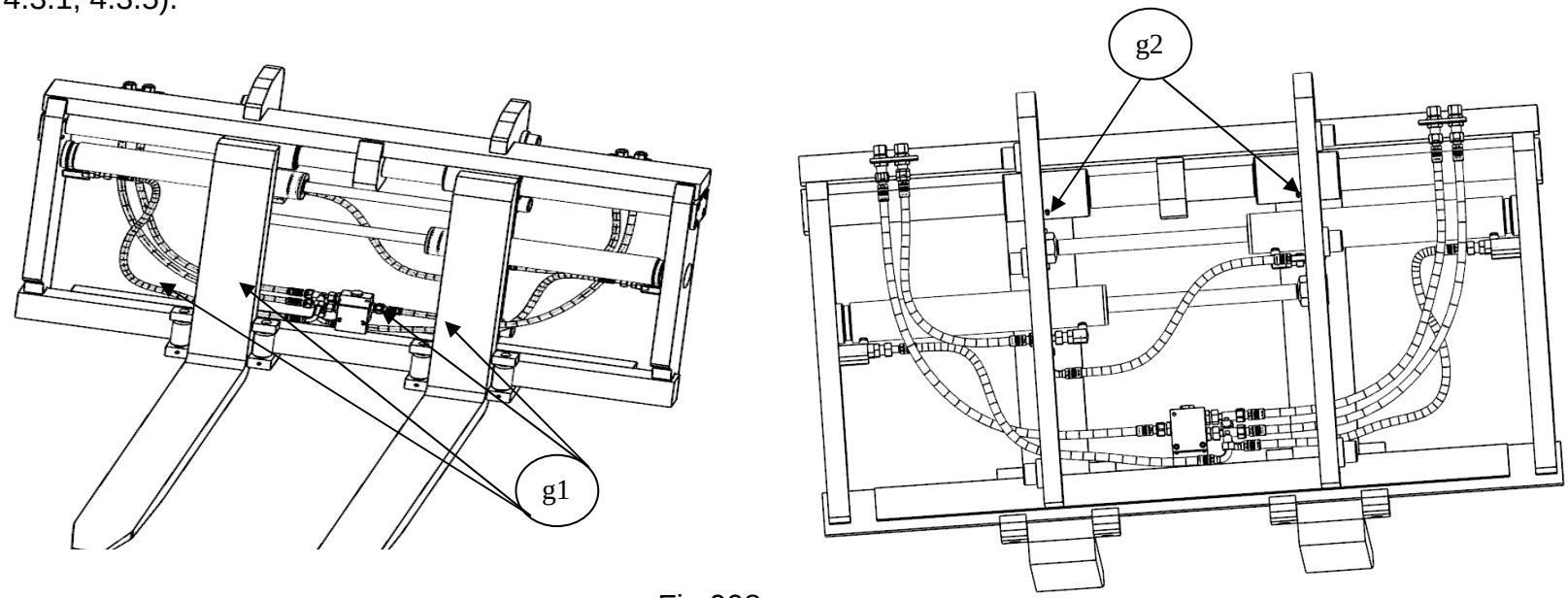

Fig.008

4.2.2 Every 2000 hours

- In addition to that indicated in the previous point, carry out:
- The control of the cylinder stems and the guide bushings; the scratched or dented stem and scratched or worn bushings, as well as the excessive play of the stem (> 0.25 mm. or 0.001 inches) requires the replacement of parts.

4.3 EXTRAORDINARY MAINTENANCE

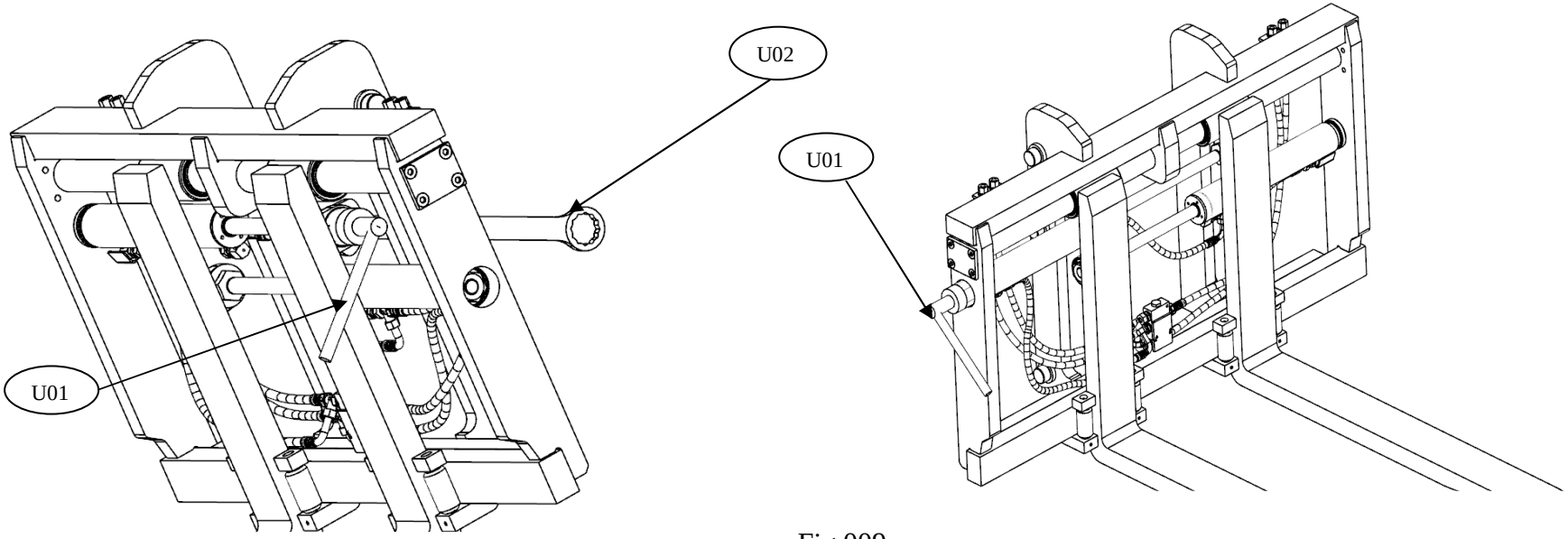

Fig 009

4.3.1 Preliminary operations

- Before performing any extraordinary maintenance, turn off the forklift and remove the pressure in the supply circuit.

- Make sure that the pump is not engaged and the lever of the distributor is not operated during the entire maintenance operation.

4.3.2 Disassembly of the fork shift right cylinder (Driver's view) (Fig.009)

- Remove the hydraulic circuit connection pipes from the right cylinder (Driver's view) observing the precautions mentioned in section 4.3.1
- Holding the opposite hex with the wrench ch60 "U02" loosen the nut with the socket wrench “U02” ch50.
- Unscrew the nut on the bulkhead with the socket wrench ch50 “U01”.
- Extract the cylinder.

To reassemble the cylinder perform the operations in reverse order.

4.3.3 Disassembly of the fork shift left cylinder (Driver's view) (Fig.010)

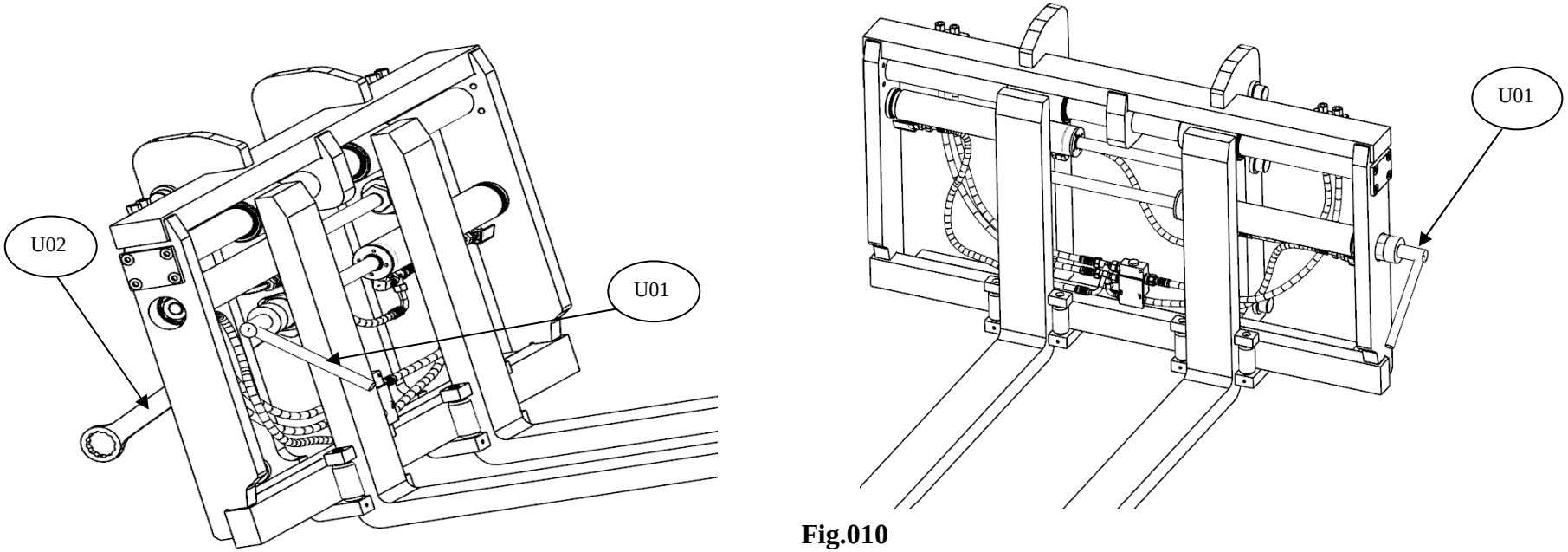

Fig.010

- Remove the hydraulic circuit connection pipes from the left cylinder (Driver's view) observing the precautions mentioned in section 4.3.1
- Holding the opposite hex with the wrench ch60 "U02" loosen the nut with the socket wrench “U02” ch50.
- Unscrew the nut on the bulkhead with the socket wrench ch50 “U01”.
- Extract the cylinder.

To reassemble the cylinder perform the operations in reverse order.

4.3.4 Disassembly and reassembly of the lower fork sliding roller

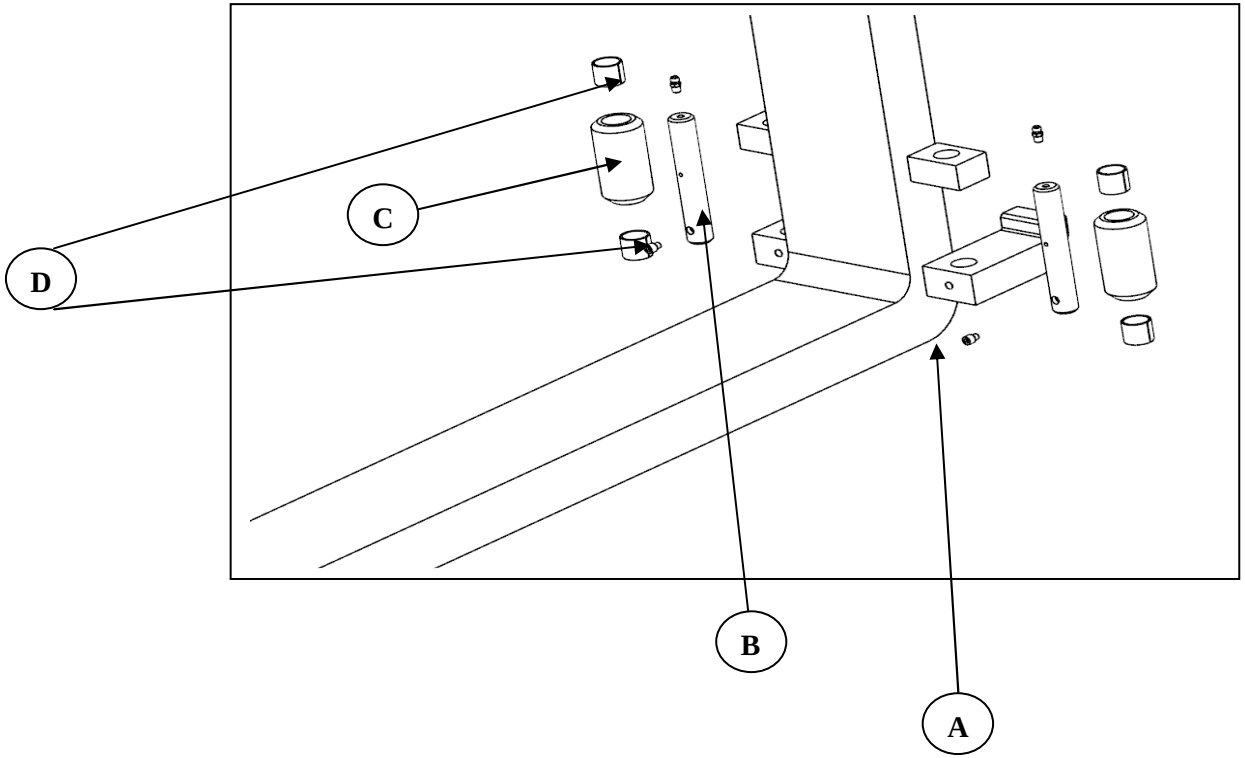

- After having disassembled the fork support (see point 2.3), loosen the dowel "A" with a 4 mm Allen key
- Extract the pin “B”.
- Extract the roller “C”.
- Check the wear of the bushings "D" and replace if necessary.
- After care cleaning, reassemble by performing all the operations described above in reverse.

4.3.5 Replacement of the fork shift cylinder seal (Fig.011)

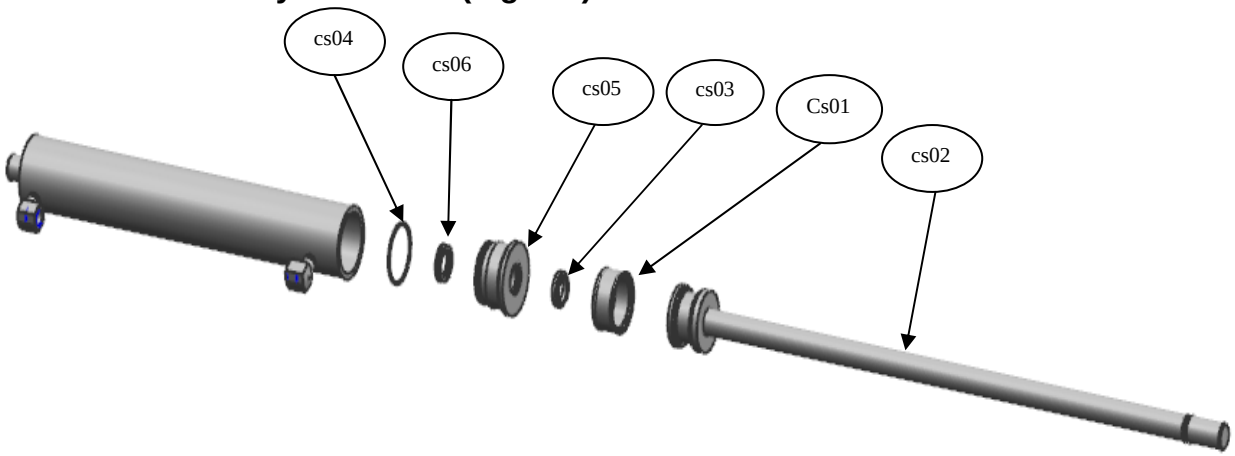

Fig.011

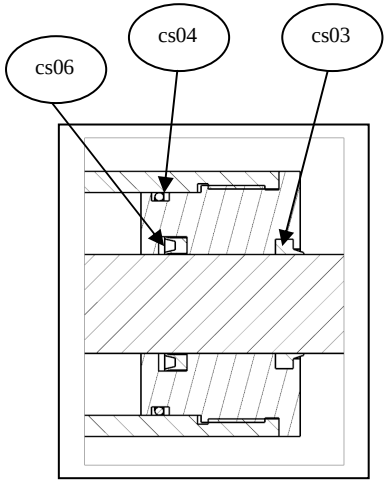

Det.”A”

- After having performed one or more operations as per point 4.3.2 and/or 4.3.3.
- Unscrew the cap "cs05", with a pin wrench, and remove it along with the stem "cs02" and parts "cs03", "cs04" and "cs06" of the cylinder casing
- Seal replacement procedures “cs01”, “cs03”, “cs04”, “cs06”.
- The reassembly of the cylinder must be performed in reverse order to that indicated above, with particular attention to cleaning and checking the exact orientation of the seals “cs03”, “cs04”, “cs06” (Det. "A")
- The same disassembly and replacement method of seals is valid for the right cylinder (driver's view) of the supply system.

4.3.6 Equipment restoration

After each maintenance operation, restore the equipment to the initial condition and perform the tests referred to in point 2.5.

4.4 HYDRAULIC SYSTEM LAYOUT (forks positioning) (Fig.012)

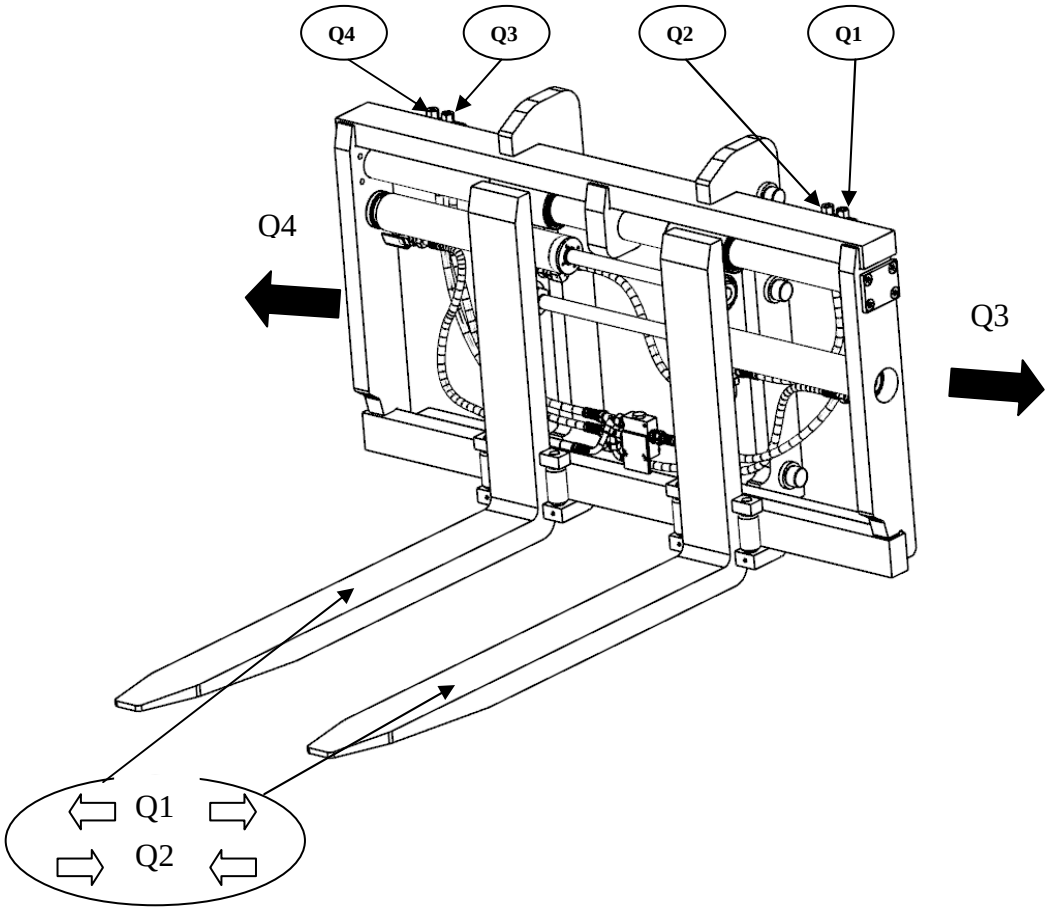

- To spread/open the forks, introduce pressure in "Q1"
- To approach/close the forks, introduce pressure in "Q2"
- Left side-shift (operator side view) "Q3"
- Right side-shift (operator side view) "Q4"

Hydraulic layout

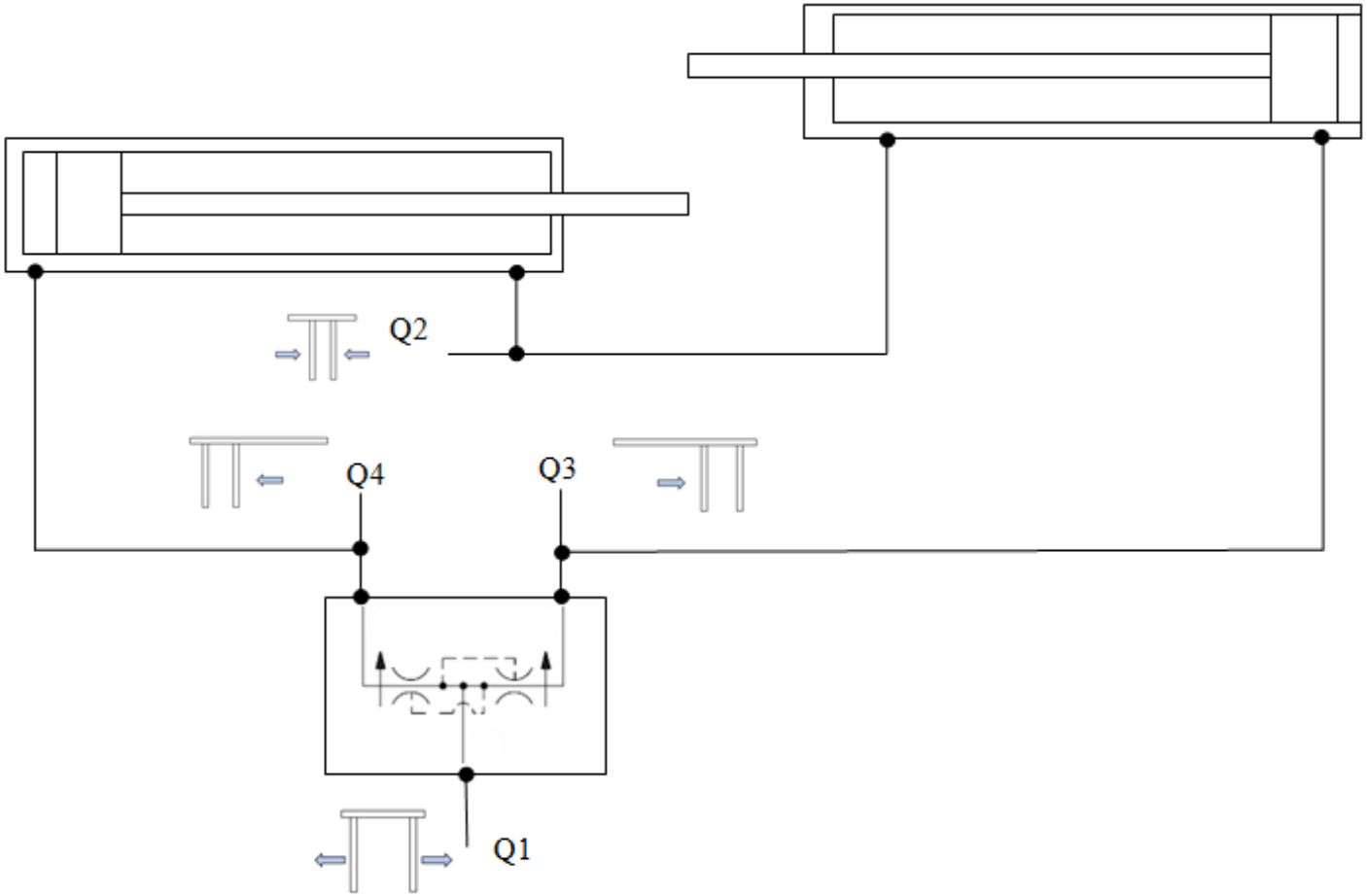

Fig.012

Table of the recommended oil flow rates and operating pressures.

- Fork positioner oil flow rate:

  minimum 30 l/min. Recommended 40 l/min. maximum 60 l/min

- Hydraulic functions and recommended pressures:

  fork positioner pressure min. 14 MPa (maximum pressure at the distributor 25 MPa)

  side-shifter pressure min. 12 MPa, max. 22 MPa (maximum pressure at the distributor 25 MPa)

5 TROUBLESHOOTING

FAULTS	CAUSES	SOLUTION
5.1 The forks do not shift	Obstructions or accumulation of dirt on sliding tracks	Remove the obstructions, clean and grease the sliding tracks
	Insufficient hydraulic pressure	Control and/or regulation of the pressure delivered by the forklift's pump.
	Hydraulic circuit blocked or broken	Eliminate the obstruction or replace the damaged pipe
	Leak inside the cylinder (worn seals)	Control and possible replacement of the seals, see point “4.3.2” and/or “4.3.3” and “4.3.5”
5.2 The shifting of the forks is too slow	Insufficient oil flow	Control and regulation of the flow delivered by the hydraulic circuit. Adjust the forklift's oil flow.
	Obstructions in the hydraulic circuit	Eliminate the obstruction or replace the damaged pipe
	Leak inside the cylinder (worn seals)	Control and possible replacement of the seals, see point “4.3.2” and/or “4.3.3” and “4.3.5”
5.3 The shifting of the forks is too fast	High oil flow	Control and regulation of the flow delivered by the hydraulic circuit. Adjust the forklift's oil flow.
5.4 The forks do not shift in a synchronized manner	Obstructions or accumulation of dirt on sliding tracks	Remove the obstructions, clean and grease the sliding tracks
5.5 The side-shift does not occur at all	Frame deformed	Replace the frame removing it as in point 4.3.5
	Mud or other obstruction on the track of the lower rollers	Clean the track and lubricate shoes as in point 4.2.1
	Deteriorated hoses	Replace the pipes

FAULTS	CAUSES	SOLUTION
	Obstruction in the hydraulic circuit	Eliminate the obstruction
	Insufficient pressure	Increase the pressure
	Deteriorated pump	Repair or replace the pump of the forklift
5.6 The side-shift is too slow	Worn sliding rollers	Replace rollers after cleaning.
	Emulsified oil, the pump draws in air	Check the oil level in the tank of the forklift
	Deteriorated pump	Repair or replace the pump of the forklift
	Insufficient pressure	Increase the pressure
	Air in the hydraulic system	Bleed the forklift's system and check the oil level
5.7 The side-shift occurs with jolts or irregularly	Air in the system	Bleed the system

NOTE: If there are difficulties or in the case of defects other than those listed, please contact BOLZONI Technical Support Service.

6 RECYCLING

6.1 Replaced parts should be disposed of, as in the case of complete destruction, separately depending on the nature of the material and in compliance with the requirements of the law on the disposal of solid industrial waste.

Frame unit		**Fasteners, piping and other components**	
Welded frame	*Steel*	*Hoses and fittings*	*Nylon and steel*
Supports	*Steel*	*Hydraulic oil*	*Dispose of in compliance with local regulations*
Fastening of cylinders	*Steel*	*Bushings*	*Steel and Teflon*
Chrome bar	*Steel and chrome*	*Pins, screws, bolts, snap rings*	*Steel*
Paint	*Epoxy polyester*	*O-ring*	*rubber*
Cylinders	*Steel and chrome*	*Seals*	*Polyurethane*
Shift cylinder stems	*Steel and chrome*	*Shoes*	*Polyamide*

7 WARRANTY

BOLZONI S.p.A. warrants all its products for 12 months for an 8-hour-a-day use every working day starting from the date of shipment. If used more than 8 hours per day the warranty period shall be reduced proportionately. The warranty is limited to replacing the parts that the company deems defective due to material or machining defects ex *BOLZONI S.p.A.* works and does not include labour or travel costs for replacing said parts.

It is further understood that recognition of the warranty is void if the anomaly results from an inappropriate use of the product, if commissioning was not carried out according to *BOLZONI S.p.A* specifications or if non-original parts have been assembled on *BOLZONI S.p.A.* products. *BOLZONI S.p.A* products. are not guaranteed for uses that exceed the ratings stated on the plates and in the technical documentation attached to the order.

All the equipment manufactured by *BOLZONI S.p.A*. is covered by insurance for any damage caused to third parties by defective parts or their malfunction; damage arising from improper use or misuse of the equipment is not covered.