360-degree Rotating Pallet Fork Clamp

Models KG-H

The Bolzoni Auramo 360 degree rotating pallet fork clamp KG-H model is a versatile attachment that can be used for handling various loads and in particular to empty containers and bins in foundries, food and agriculture industries.

The Bolzoni Auramo 360 degree rotating pallet fork clamps are available in a wide range of capacities and options, representing the solution to the most various handling needs.

Features:

- Very rigid frame structure with single piece double “T” profile. Wide visibility window thanks to new vertical plates position at the extremity of the frame. Narrow vertical plates.
- Superior visibility through the frame grants safe and easy handling operations.
- 360 degree rotation in both directions.
- New check valve for simple and precise arm synchronism, easy fitting, new position in the upper profile shadow granting valve protection and high visibility of the structure.
- New fixing system of the sliding pads to relief stress.
- New self aligning cylinder fixing to avoid breakage.
- Combined assembly of the new valve and new rotating joint. Easy installation on the fork lift truck thanks to the hoses feeding the clamp and connecting the rotating joint to the clamp rear side.
- Forks welded directly to the arm carriers for reduced effective thickness, centre of gravity and weight.
- Versions with new separate side shift: cylinder position within the frame window to improve side shifting system. Upper and lower pads with greasers.

BOLZONI AURAMO

360° Rotating Pallet Fork Clamps

Models KG-H

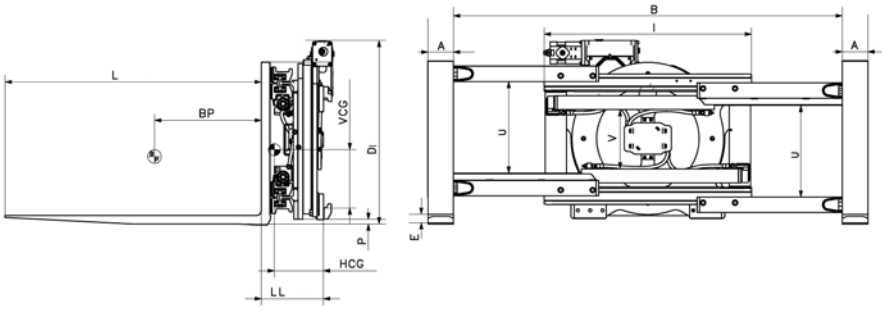

Range: 1000 Kg - 4000 Kg

- Strong double T-profile frame.
- Reduced weight, effective thickness and centre of gravity.
- Excellent visibility.
- 360° continuous rotation in both directions.
- Forks welded to the arm carriers.
- Commonly used to empty containers and bins in foundries, food and agriculture industries.

Model	Code	Capacity	Load Centre	Opening Range	Fork Dimensions	Frame Width	Minimum Carriage Width	Height	Weight	Horizontal Centre of Gravity	Vertical Centre of Gravity	Effective Thickness	Side Visibility	Ground Clearance	Mounting Class
		Q¹/Q² kg	*BP mm*	*B mm*	*LxAxE mm*	*I mm*	*FL mm*	*D¹ mm*	*W Kg*	*HCG mm*	*VCG mm*	*LL mm*	*U mm*	*P mm*	*ISO 2328*
KG 10 H4A	47 - 170	1000 / 1600	500	470 - 1700	1000x100x35	930	580	749	371	180	225	281	337	20	2 A
KG 10 H5A	47 - 170	1000 / 1600	500	470 - 1700	1100x100x35	930	580	749	392	230	222	281	337	20	2 A
KG 10 H6A	47 - 170	1000 / 1600	500	470 - 1700	1200x100x35	930	580	749	410	252	218	281	337	20	2 A
KG 10 H6A EU	35 - 158	1000 / 1600	500	350 - 1580	1200x100x35	1050	580	749	390	229	224	281	337	20	2 A
KG 14 H4A	47 - 170	1400 / 2000	500	470 - 1700	1000x100x40	930	580	749	371	180	225	281	337	20	2 A
KG 14 H5A	47 - 170	1400 / 2000	500	470 - 1700	1100x100x40	930	580	749	392	230	222	281	337	20	2 A
KG 14 H6A	47 - 170	1400 / 2000	500	470 - 1700	1200x100x40	930	580	749	410	252	218	281	337	20	2 A
KG 14 H6A EU	35 - 158	1400 / 2000	500	350 - 1580	1200x100x40	1050	580	749	390	229	224	281	337	20	2 A
KG 18 H4A	49 - 182	1800 / 2500	500	490 - 1820	1000x120x40	970	580	749	480	193	270	282	336	28	2 A
KG 18 H5A	49 - 182	1800 / 2500	500	490 - 1820	1100x120x40	970	580	749	438	238	217	282	336	28	2 A
KG 18 H6A	49 - 182	1800 / 2500	500	490 - 1820	1200x120x40	970	580	749	443	250	214	282	336	28	2 A
KG 18 H6A EU	32 - 161	1800 / 2500	500	320 - 1610	1200x120x40	1100	580	749	449	246	213	282	336	28	2 A
KG 22 H4A	49 - 182	2200 / 2500	500	490 - 1820	1000x120x40	970	580	749	480	193	270	282	336	28	2 A
KG 22 H5A	49 - 182	2200 / 2500	500	490 - 1820	1100x120x40	970	580	749	438	238	217	282	336	28	2 A
KG 22 H6A	49 - 182	2200 / 2500	500	490 - 1820	1200x120x40	970	580	749	443	250	214	282	336	28	2 A
KG 22 H6A EU	32 - 161	2200 / 2500	500	320 - 1610	1200x120x40	1100	580	749	449	246	213	282	336	28	2 A
KG 28 H4B	49 - 182	2800 / 3500	500	490 - 1820	1000x120x45	970	870	860	512	182	319	307	383	22	3 A
KG 28 H5B	49 - 182	2800 / 3500	500	490 - 1820	1100x120x45	970	870	860	534	194	316	307	383	22	3 A
KG 28 H6B	49 - 182	2800 / 3500	500	490 - 1820	1200x120x45	970	870	860	548	203	314	307	383	22	3 A
KG 28 H6B EU	32 - 161	2800 / 3500	500	320 - 1610	1200x120x45	1100	870	860	539	228	305	307	383	22	3 A
KG 35 H6B	55 - 205	3500 / 4000	500	550 - 2050	1200x150x50	1250	870	930	860	264	275	335	450	21	3 A
KG 35 H6B EU	26 - 149	3500 / 4000	500	260 - 1490	1200x150x50	1150	870	930	820	266	272	335	450	21	3 A
KG 40 H6B	55 - 205	4000 / 4000	500	550 - 2050	1200x150x60	1250	870	930	880	285	345	335	450	21	3 A
KG 40 H6B EU	26 - 149	4000 / 4000	500	260 - 1490	1200x150x60	1150	870	930	840	285	345	335	450	21	3 A

Notes:

- Two hydraulic functions required.
- Q1 = when clamping without rotation; or when rotating without clamping.
- Q2 = capacity on the forks.
- The capacities when clamping depend on the load type and configuration.
- 'EU' models for Europallet handling.
- Pressure relief valve.
- Rotating centre.
- Double check valve.
- Forks max. lenght 2.400 mm.

Options:

- Special openings.
- Separate sideshift
- Quick change lower hooks.
- Pressure gauge.
- Load backrest.
- Bolt-on forks.
- Slip-on arms.

CERTIFIED ISO 9001 MANUFACTURER

79BA0040E - 0514

BOLZONI S.p.A.
I CASONI 29027 PODENZANO - PIACENZA (ITALIA) - Tel. +39 0523 555511- Fax +39 0523 524087
www.bolzonigroup.com - sales@bolzonigroup.com

BOLZONI AURAMO